# CHAPTER III
# MAIN ASSEMBLY

## MAIN ASSEMBLY

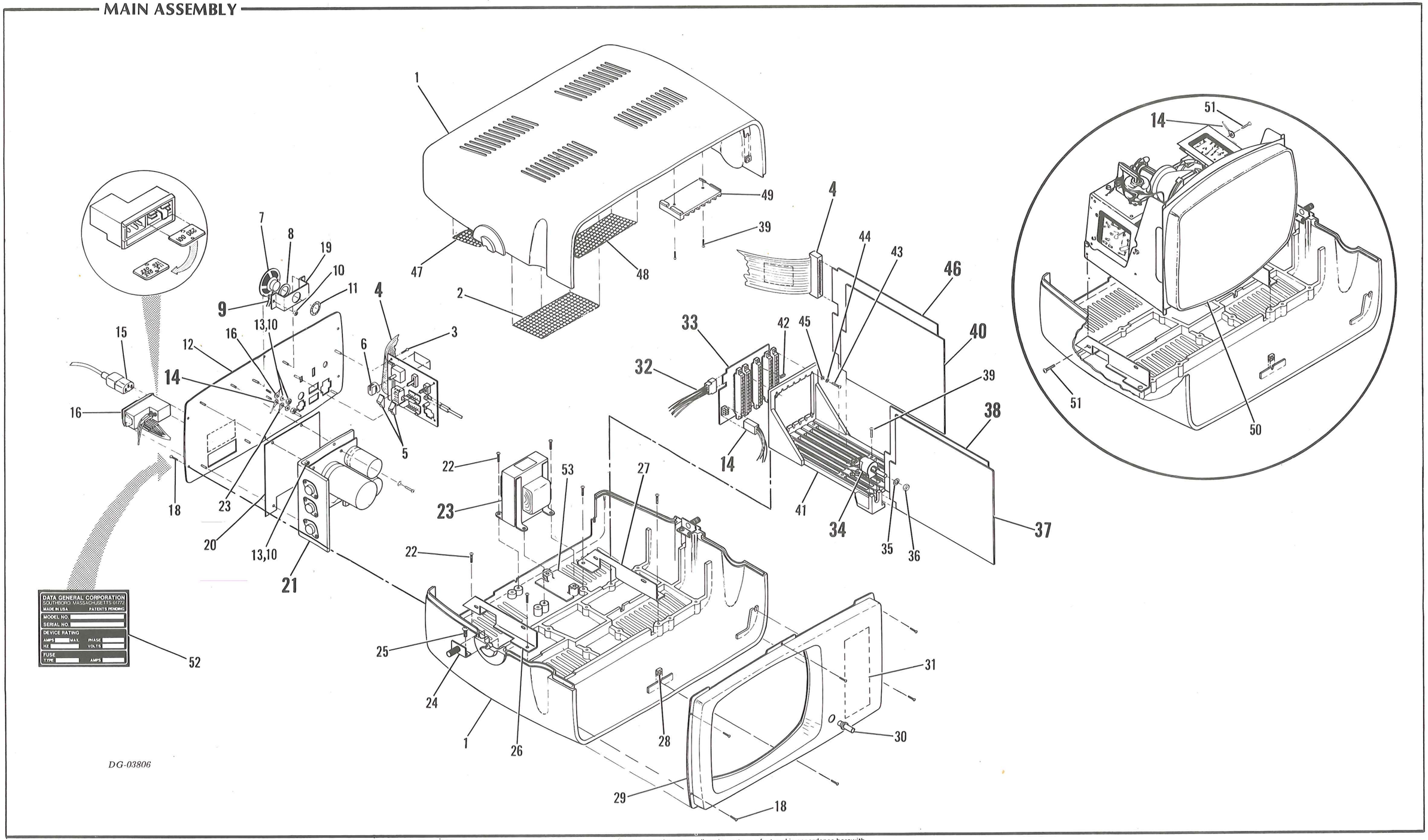


The drawings and specifications contained herein are the property of DGC and shall neither be reproduced in whole or in part without DGC prior written approval nor be implied to grant any license to make,use or sell equipment manufactured in accordance herewith.

| PAGE & ITEM NO. | DESCRIPTION | QTY | DGC PART NO. | REF PAGE NO. |
|---|---|---|---|---|
| III-2 | **MAIN CRT ASSEMBLY BASIC MODEL** | | **005-008001** | I-2 |
| | **MAIN CRT ASSEMBLY ENHANCED MODEL** | | **005-008002** | I-2 |
| 1 | MECH PT ENCL CASE INTEL TERM | 2 | 002-004955 | |
| 2 | MECH PT CVR 5.34 X 2.38 LCD | 2 | 002-000121 | |
| 3 | HDW SCR PHH PNH SCDP 4-40 X 1/4 | 4 | 106-000478 | |
| 4 | **ASSY PCB ACCESSORY TESTED L/C DISPL** | 1 | **005-006769** | |
| | IPL ACCESSORY BD DISPL | REF | 016-000323 | |
| 5 | STD PT CAP, SW BTN BLU 6-02-56 | 2 | 123-001024 | |
| 6 | STD PT KNOB, RND W/BAR POINTER 4011C | 1 | 123-001020 | |
| 7 | STD PT SPEAKER, 2" P.M. 99-60360 | 1 | 123-000828 | |
| 8 | HDW WSHR FLAT FBR 1.1250DX, 87571DX.031 | 1 | 106-000884 | |
| 9 | **ASSY CA INT BEEPER TO CONN FRAME** | 1 | **005-006756** | III-8 |
| 10 | HDW NUT HEX KEP SCDP 6-32 | 8 | 106-000256 | |
| 11 | STD PT CLIP, RND TNRMN (1515155-014) | 1 | 123-001059 | |
| 12 | MECH PT REAR PLATE ASSY, CRT TERM | 1 | 002-005374 | |
| 13 | HDW WSHR FLAT NO. 6.156 X .375 X .049 SCDP | 6 | 106-000461 | |
| 14 | **ASSY CA INT P/S TO B/P L/C DISPL** | 1 | **005-006835** | III-10 |
| 15 | CORD LINE BELDEN 17250 | 1 | 109-000249 | |
| 16 | CONN W/LN FLTR/VOLT SEL 6J4 | 1 | 111-000709 | |
| 17 | MISC INSPECTION STICKER | 5 | 110-000067 | |
| 18 | HDW SCR PHH PNH TF BLK OXD 6-32 X 3/8 | 12 | 106-000909 | |
| 19 | MECH PT SPKR BRKT, LCD | 1 | 002-005770 | |
| 20 | MECH PT P/S MTG BRKT THERMAL PAD | 1 | 002-005789 | |
| 21 | **ASSY PWR SUPPLY LCD** | 1 | **005-006767** | |
| | MECH PT BRKT, P/S MTG DISPL TERM | 1 | 002-005298 | |
| | **ASSY PCB P/S L/C DISPL** | 1 | **005-006768** | |
| | IPL P/S PCB LCD | REF | 016-000353 | |
| | **ASSY CA INT P/S JMPR L/C DISPL** | 1 | **005-006836** | |
| | IC LM320K-12 NEG 12V 3 TERM REG | 1 | 100-000354 | |
| | IC LM340K-15 POS 15V 3 TERM REG | 1 | 100-000355 | |
| | IC LM323K SH323KC | 1 | 100-000591 | |
| | HDW SCR PHH PNH SCDP SEMS 6-32 X 1/2 | 5 | 106-000546 | |
| | HDW WSHR FLAT PVC .17IDX .370DX 0.06THK | 1 | 106-000608 | |
| | STD PT SOCKET TO-3 | 3 | 123-000052 | |
| | STD PT PAD,COND SILICONE TO-3 | 3 | 123-001062 | |
| 22 | SLTD HEX WSHR HD PLASTITE SCDP NO. 6 X 3/8 | 8 | 106-000916 | |
| 23 | **ASSY TRANSFORMER LCD** | 1 | **005-007616** | III-10 |
| | XFMR PWR, DISPL TERM | 1 | 104-000165 | |
| | SLEEVING 3/16" HEAT SHRINK | 1 | 109-000099 | |
| | TERM R TNG NO. 6 STUD 18-22 AMP 2-34144-1 | 1 | 111-000264 | |
| | TERM FEMALE .093DIA 18-22GA MOLEX 1381 | 7 | 111-000270 | |
| | CONN CONTACT AMP 87270 SER 87269-1 | 2 | 111-000671 | |
| | CONN 2P AMP NO 87270-2 | 1 | 111-000672 | |
| | TERM FEMALE PIN NO 18-22 02-05-3204 MLX | 5 | 111-000700 | |
| 24 | MECH PT BRKT, ANGLE CASE/YOKE SPRT | 2 | 002-005394 | |
| 25 | SLTD HEX WSHR HD PLASTITE SCDP NO. 8 X 3/8 | 4 | 106-000915 | |
| 26 | MECH BRKT MONITOR LH L/C CRT TERM | 1 | 002-005403 | |
| 27 | MECH PT BRKT MONITOR RH L/C CRT TERM | 1 | 002-005404 | |
| 28 | STD PRT TNRMN CLIP C11351-632 | 12 | 123-001120 | |
| 29 | MECH PT BEZEL, CRT TERM, INTEL TERM | 1 | 002-005122 | |
| 30 | STD PT KNOB FOR SHAFT, 295601 | 1 | 123-000979 | |
| 31 | MECH PT FOAM PAD LCD | 1 | 002-006123 | |
| 32 | **ASSY CA INT CRT TO B/P L/C DISPL** | 1 | **005-006844** | III-6 |
| 33 | **ASSY PCB CONN FRAME TESTED** | 1 | **005-006757** | |
| | IPL B/P DISPL TERM | REF | 016-000322 | |
| 34 | **ASSY CA INT PWR SWITCH L/C DISPL** | 1 | **005-006752** | III-8 |
| 35 | HDW WSHR INTL TOOTH SCDP 3/8 | 1 | 106-000554 | |
| 36 | HDW NUT HEX 3/32 THK SCDP-3/8-32UNEF | 1 | 106-000553 | |

The drawings and specifications contained herein are the property of DGC and shall neither be reproduced in whole or in part without DGC prior written approval nor be implied to grant any license to make, use or sell equipment manufactured in accordance herewith.

| PAGE & ITEM NO. | DESCRIPTION | QTY | DGC PART NO. | REF PAGE NO. |
|---|---|---|---|---|
| 37 | ASSY PCB VIDEO GEN | 1 | | |
| | L/C DISPL BASIC | 1 | 005-006761 | |
| | IPL DSPL VIDEO LCD | REF | 016-000347 | |
| | ENHANCED TERM | 1 | 005-006837 | |
| | IPL DSPL VID TE LCD | REF | 016-000348 | |
| 38 | ASSY PCB DISPL MEMORY | 1 | | |
| | 0607 BASIC | 1 | 005-007544 | |
| | 0608 BASIC | 1 | 005-007546 | |
| | 0607 TE | 1 | 005-007548 | |
| | 0608 TE | 1 | 005-007550 | |
| | IPL DSPL MEM LCD | REF | 016-000343 | |
| | IPL DISPLAY MEMORY | REF | 016-000344 | |
| 39 | HDW SCR PHH PNH PLASTITE SCDP NO. 4 X 1/2 | 6 | 106-000852 | |
| 40 | ASSY PCB CTRL TESTED L/C DISPL | 1 | 005-006765 | |
| | IPL DSPL CTL LCD | REF | 016-000349 | |
| 41 | MECH PT CARD GUIDE, BOTTOM DISPL TERM | 1 | 002-005330 | |
| 42 | CONN POLARIZING KEY BETWEEN CONTACT | 5 | 111-000723 | |
| 43 | HDW SCR PHH PNH SCDP 4-40X 9/16 | 6 | 106-000065 | |
| 44 | HDW WSHR LOCK SPLIT SCDP NO. 4 | 6 | 106-000669 | |
| 45 | HDW WSHR FLAT NO 4, .125 X .312 X 0.032 SCDP | 6 | 106-000265 | |
| 46 | ASSY PCB I/O TESTED L/C DISPL | 1 | 005-006759 | |
| | IPL ASYNCH I/O L/C DISPL | REF | 016-000350 | |
| 47 | MECH PT CVR 5.81 X 2.69 LCD | 1 | 002-006120 | |
| 48 | MECH PT CVR W/NOTCHES LCD | 1 | 002-006122 | |
| 49 | MECH PT CARD GUIDE TOP DISPL TERM | 1 | 002-005329 | |
| 50 | PVR ASSY 12" VIDEO MONITOR | 1 | 118-000519 | III-12 |
| 51 | HDW SCR HEX WSHR HD TF SCDP 8-32 X 5/16 | 3 | 106-000816 | |
| 52 | EQUIPMENT LABEL | 1 | 002-006209 | |
| 53 | MECH PT SHIELD | 1 | 002-006312 | |

The drawings and specifications contained herein are the property of DGC and shall neither be reproduced in whole or in part without DGC prior written approval nor be implied to grant any license to make, use or sell equipment manufactured in accordance herewith.

This page intentionally left blank.

# INTERNAL CABLE CRT TO BACK PANEL

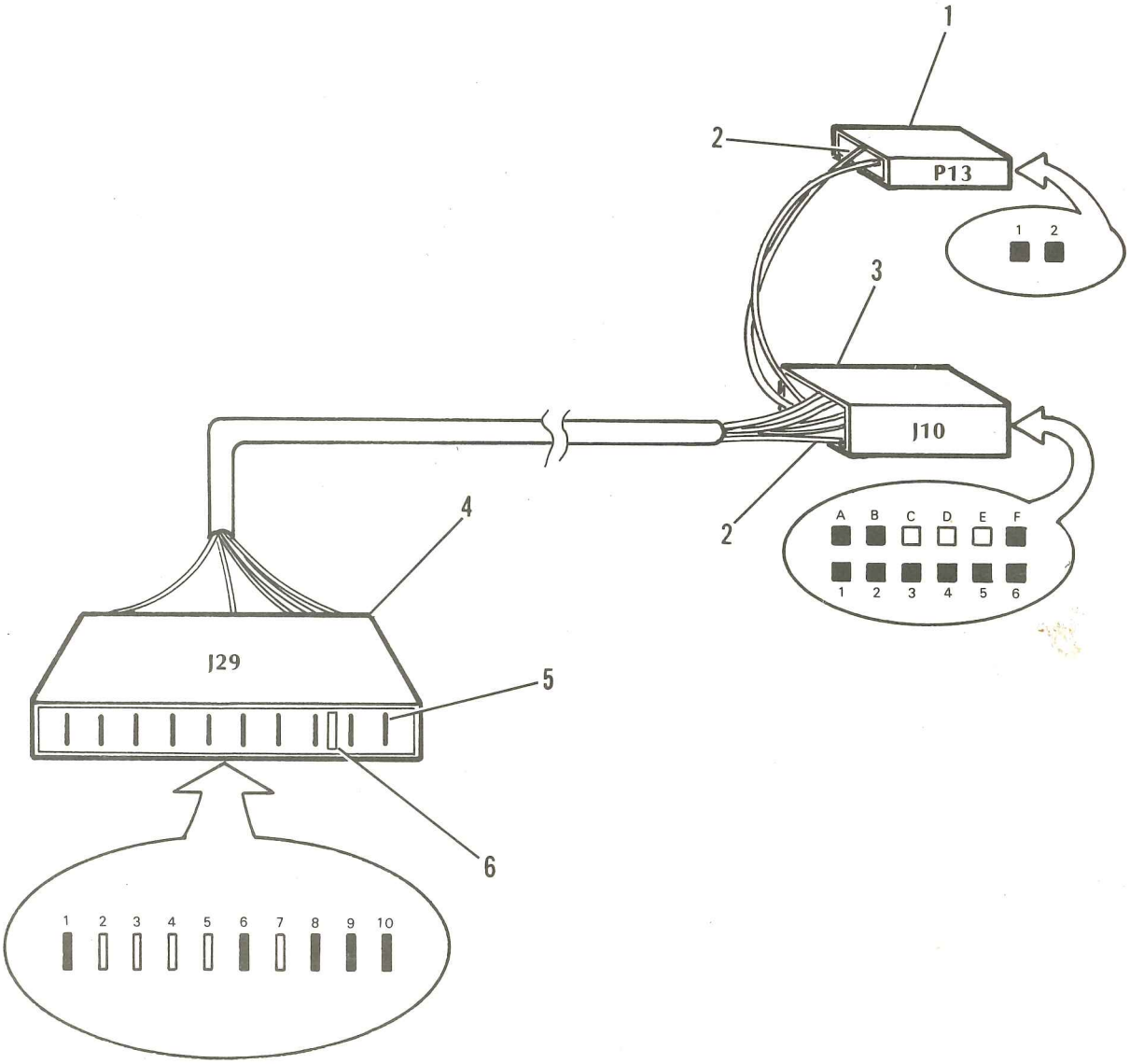


DG-03807

The drawings and specifications contained herein are the property of DGC and shall neither be reproduced in whole or in part without DGC prior written approval nor be implied to grant any license to make, use or sell equipment manufactured in accordance herewith.

| PAGE & ITEM NO. | DESCRIPTION | QTY | DGC PART NO. | REF PAGE NO. |
|---|---|---|---|---|
| III-6 | **ASSY CA INT CRT TO B/PL/C DSPL** | **1** | **005-006844** | **III-2, 22** |
| 1 | CONN PLUG 2P MOLEX 09-50-7021 | 1 | 111-000668 | |
| 2 | WIRE TERMINATION 24 AWG BLK/WHT | 14" | 029-001937 | |
| | WIRE TERMINATION 24 AWG WHT | 15" | 029-001938 | |
| | WIRE TERMINATION 24 AWG BLK | 15" | 029-001939 | |
| | WIRE TERMINATION 24 AWG ORG | 15" | 029-001940 | |
| | WIRE TERMINATION 24 AWG RED | 15" | 029-001941 | |
| | WIRE TERMINATION 24 AWG BLU | 15" | 029-001942 | |
| 3 | CONN EDGE BRD-6 DUAL W/O EARS | 1 | 111-000543 | |
| 4 | CONN IOP EDGE, 156 CTRS 583299-1 | 1 | 111-000694 | |
| 5 | CONN CONTACT CRIMP FORK 583259-3 | 5 | 111-000695 | |
| 6 | CONN KEY, POLAR, PL | | | |

The drawings and specifications contained herein are the property of DGC and shall neither be reproduced in whole or in part without DGC prior written approval nor be implied to grant any license to make, use or sell equipment manufactured in accordance herewith.

## INTERNAL CABLE BEEPER TO CONNECTOR FRAME

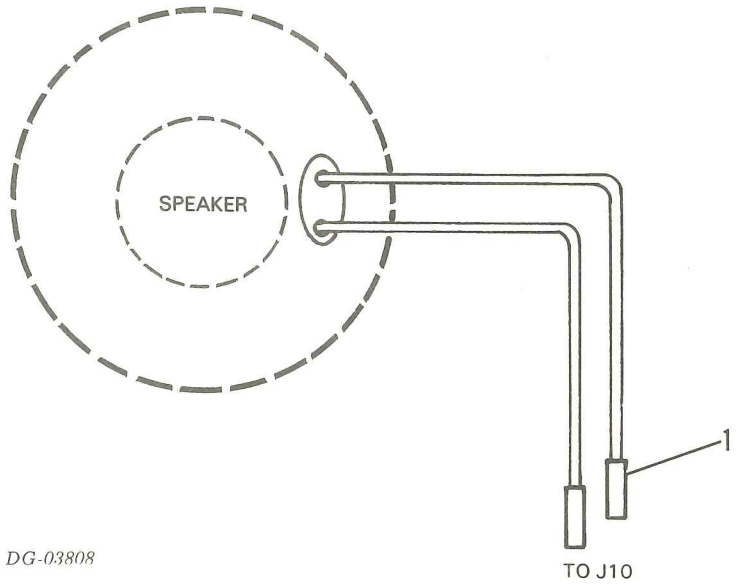


## INTERNAL CABLE POWER SWITCH

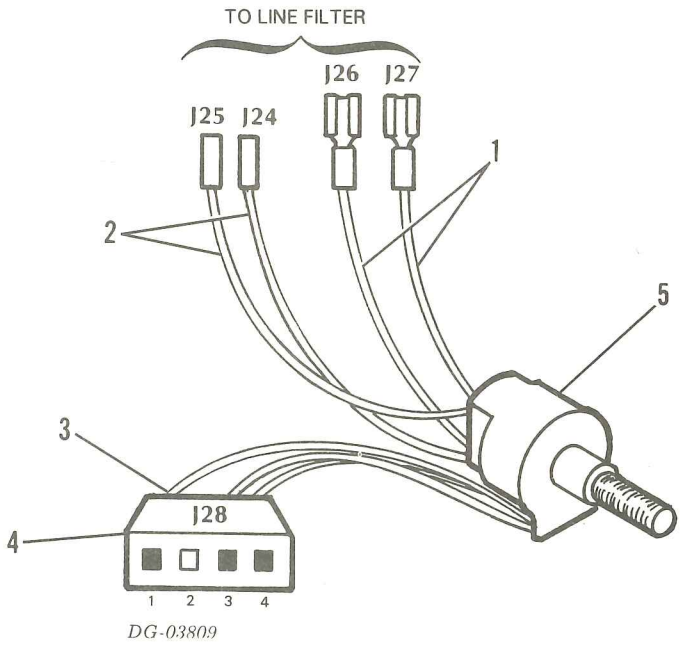


The drawings and specifications contained herein are the property of DGC and shall neither be reproduced in whole or in part without DGC prior written approval nor be implied to grant any license to make, use or sell equipment manufactured in accordance herewith.

| PAGE & ITEM NO. | DESCRIPTION | QTY | DGC PART NO. | REF PAGE NO. |
|---|---|---|---|---|
| III-8 | ASSY CA INT BEEPER TO CONN FRAME | 1 | 005-006756 | III-2, 22 |
| 1 | WIRE TERMINATION 24 AWG WHT | 15" | 029-001943 | |
| III-8 | ASSY CA INT PWR SWITCH L/C DSPL | | 005-006752 | III-2, 12, 22 |
| 1 | TERM RECPT 110 SER 22-18 AWG 509770-71 | 2 | 111-000589 | |
| 2 | TERM PIN FEMALE 18-22 02-05-3204 MLX | 2 | 111-000706 | |
| 3 | CONN CONTACT AMP 87270 SER 87269-1 | 3 | 111-000671 | |
| 4 | CONN 3P AMP NO 87270-3 | 1 | 111-000670 | |
| 5 | SWITCH CTLAY-3094 | 1 | 110-000275 | |

The drawings and specifications contained herein are the property of DGC and shall neither be reproduced in whole or in part without DGC prior written approval nor be implied to grant any license to make,use or sell equipment manufactured in accordance herewith.

## LCD TRANSFORMER

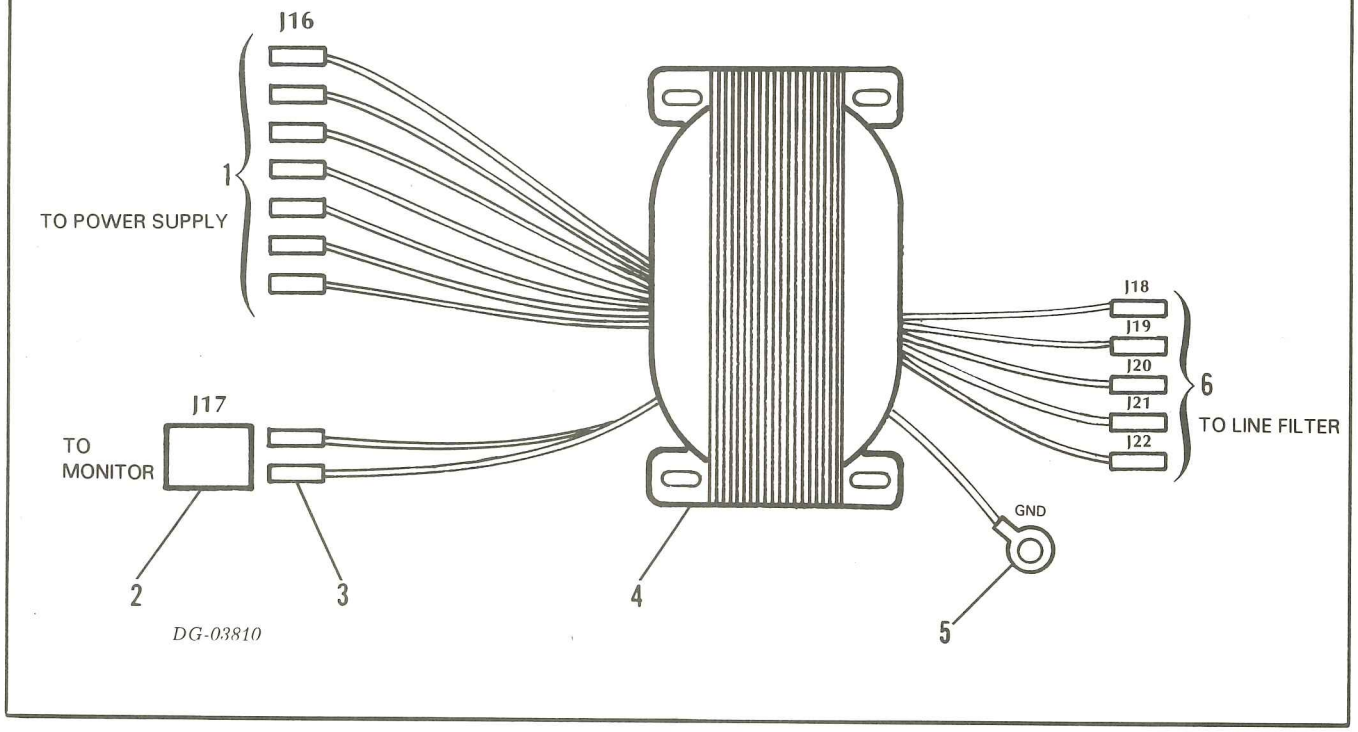


## INTERNAL CABLE POWER SUPPLY TO BACK PANEL

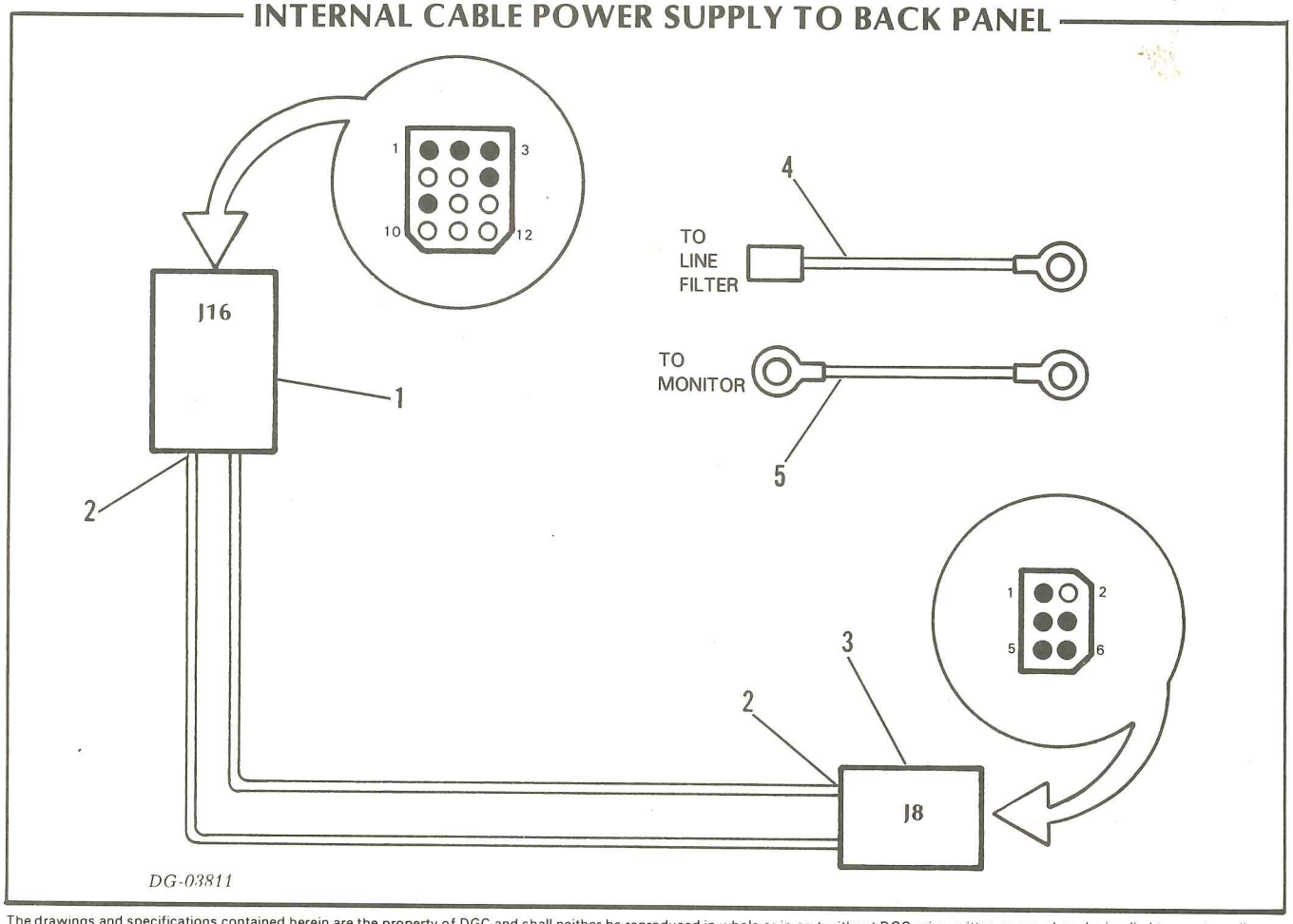


The drawings and specifications contained herein are the property of DGC and shall neither be reproduced in whole or in part without DGC prior written approval nor be implied to grant any license to make, use or sell equipment manufactured in accordance herewith.

| PAGE & ITEM NO. | DESCRIPTION | QTY | DGC PART NO. | REF PAGE NO. |
|---|---|---|---|---|
| III-10 | **ASSY XFMR LCD** | | **005-007616** | **III-2, 22** |
| 1 | TERM FEMALE.093 DIA 18-22 GA MOLEX | 7 | 111-000270 | |
| 2 | CONN 2P AMP NO 8720-2 | 1 | 111-000672 | |
| 3 | CONN CONTACT AMP 872-70 SER 87269-1 | 2 | 111-000671 | |
| 4 | XFMR PWR, DSPL TERM | 1 | 104-000165 | |
| 5 | TERM RTNG NO 6 STUD 18-22 AMP 3-34144-1 | 1 | 111-000264 | |
| 6 | TERM PIN FEMALE NO 18-22 02-05-3204 | 5 | 111-000700 | |
| III-10 | **ASSY CA INT P/S TO B/P L/C DSPL** | | **005-006835** | **III-2, 22** |
| 1 | CONN RCPT MOLEX 12CKT 1360R-1 | 1 | 111-000171 | |
| 2 | WIRE TERMINATION 18 AWG WHT | 14" | 029-001930 | |
| | WIRE TERMINATION 18 AWG BLK | 14" | 029-001931 | |
| | WIRE TERMINATION 18 AWG RED | 14" | 029-001932 | |
| | WIRE TERMINATION 18 AWG YEL | 14" | 029-001933 | |
| | WIRE TERMINATION 18 AWG BLU | 14" | 029-001934 | |
| 3 | CONN RECEPTACLE MOLEX 126-IR-2 | 1 | 111-000129 | |
| 4 | WIRE TERMINATION 18 AWG GRN | 7" | 029-001935 | III-2 |
| 5 | WIRE TERMINATION 18 AWG GRN | 14" | 029-001936 | III-2 |

The drawings and specifications contained herein are the property of DGC and shall neither be reproduced in whole or in part without DGC prior written approval nor be implied to grant any license to make, use or sell equipment manufactured in accordance herewith.

## VIDEO MONITOR ASSEMBLY

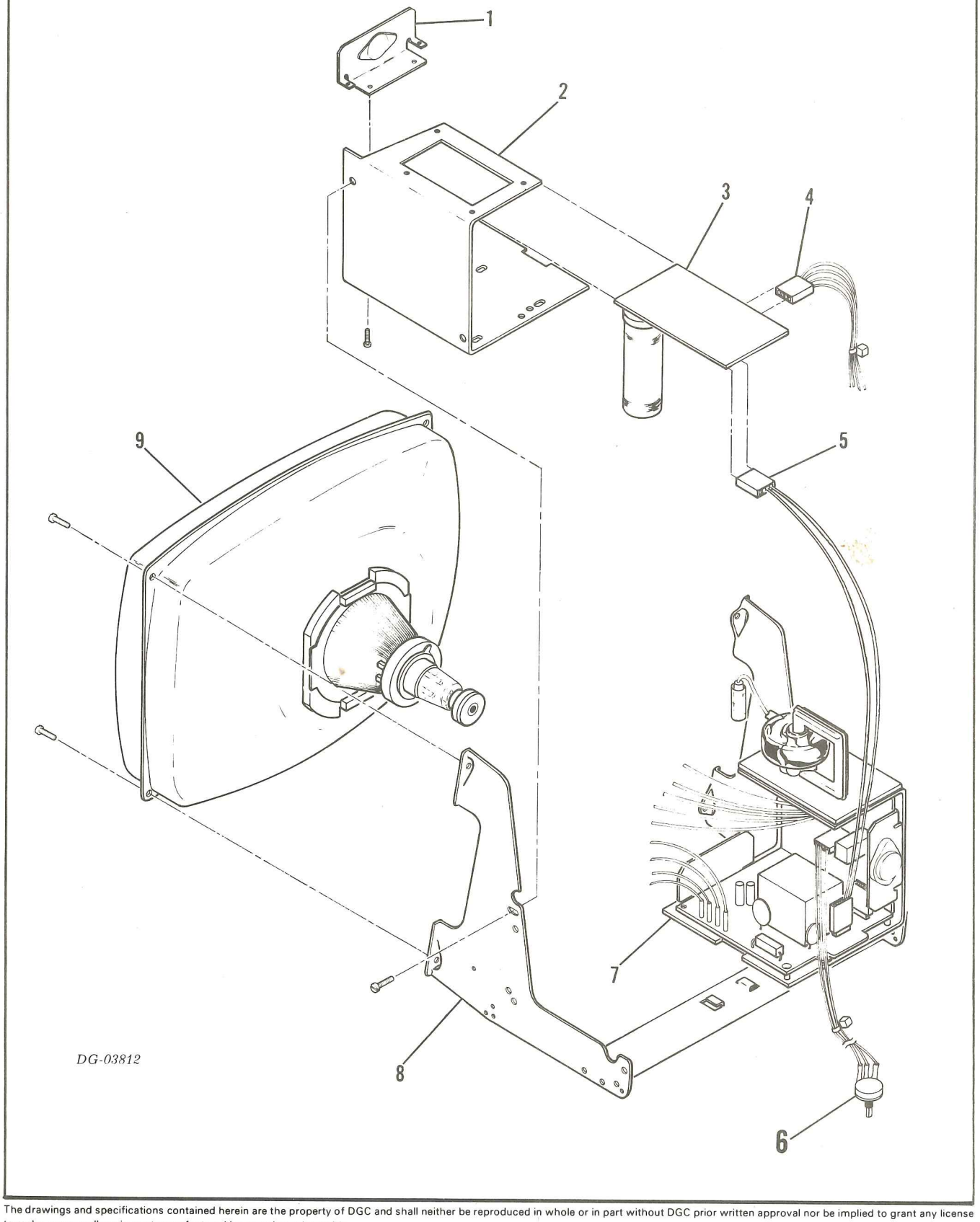


The drawings and specifications contained herein are the property of DGC and shall neither be reproduced in whole or in part without DGC prior written approval nor be implied to grant any license to make, use or sell equipment manufactured in accordance herewith.

| PAGE & ITEM NO. | DESCRIPTION | QTY | DGC PART NO. | REF PAGE NO. |
|---|---|---|---|---|
| III-12 | PUR ASSY 12" VIDEO MONITOR | | 118-000519 | |
| 1 | REGULATOR A8W (6052) 45S137368 | | 101-000380 | |
| 2 | POWER SUPPLY CHASSIS | | N/A | |
| 3 | CKT MOD P/S PCB (6052) 84V25015A68 | 1 | 116-000299 | |
| 4 | P4 TO 70V REG | 1 | N/A | |
| 5 | P5 P/S PCB TO VIDEO PPB | 1 | N/A | |
| 6 | **ASSY CA INT PWR SWITCH L/C DSPL** | | **005-06752** | **III-8** |
| 7 | PUR ASSY DEFLECTION COIL 6052 1V25019A45 | | 118-000635 | |
| 8 | MONITOR CHASSIS | | N/A | |
| 9 | CRT | | N/A | |

The drawings and specifications contained herein are the property of DGC and shall neither be reproduced in whole or in part without DGC prior written approval nor be implied to grant any license to make,use or sell equipment manufactured in accordance herewith.

## PEDESTAL ASSEMBLY

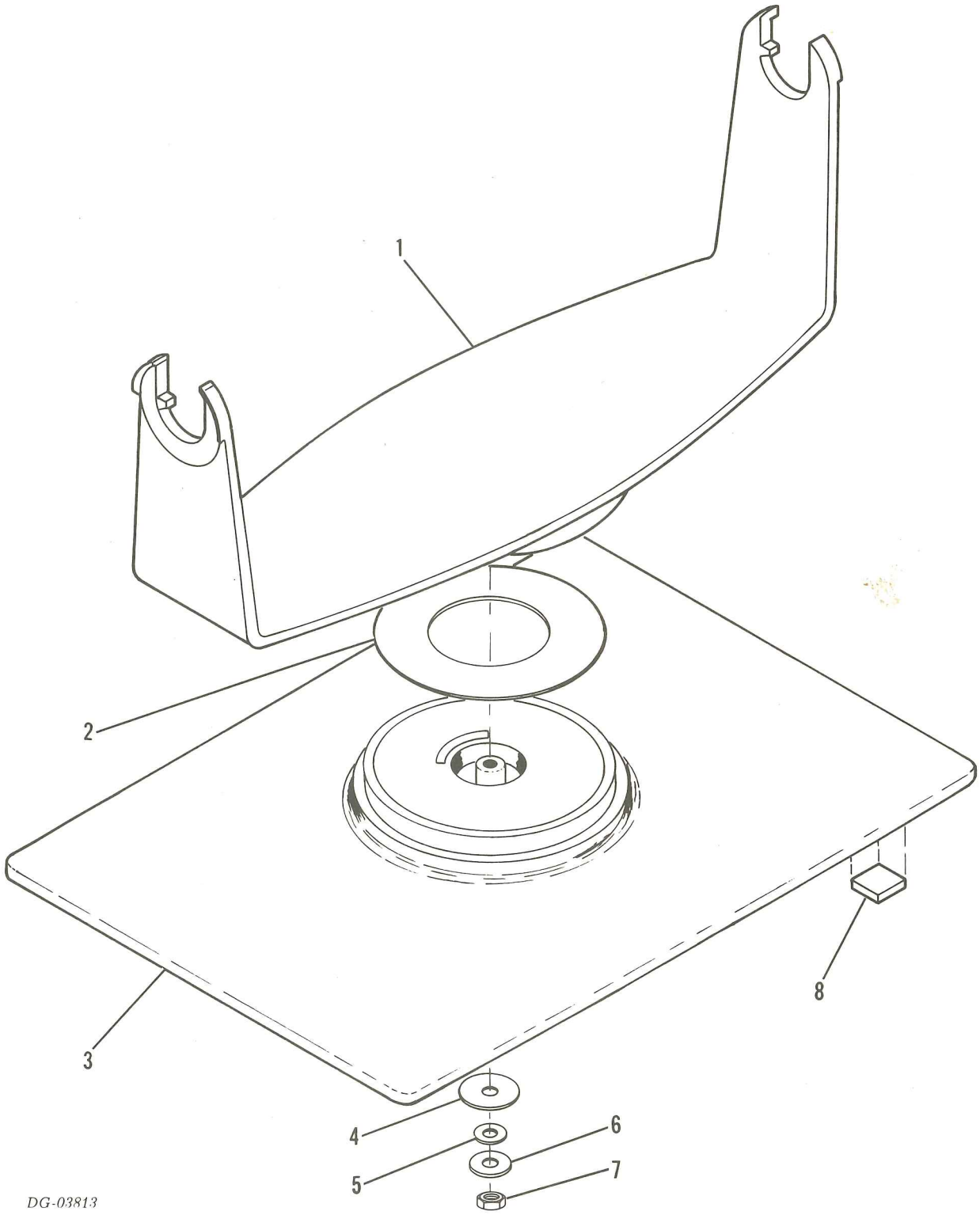


The drawings and specifications contained herein are the property of DGC and shall neither be reproduced in whole or in part without DGC prior written approval nor be implied to grant any license to make, use or sell equipment manufactured in accordance herewith.

| PAGE & ITEM NO. | DESCRIPTION | QTY | DGC PART NO. | REF PAGE NO. |
|---|---|---|---|---|
| **III-14** | **PEDESTAL ASSEMBLY** | **1** | **005-006748** | **I-2** |
| 1 | MECH PT YOKE, CAST ALUM L/C DSPL TERM | 1 | 002-005343 | |
| 2 | MECH PT BEARING PAD L/C CRT TERM | 1 | 002-005451 | |
| 3 | MECH PEDESTAL CRT ENCL INTEC RM | 1 | 002-005117 | |
| 4 | WSHR FLAT SZCP 1.25 ODX 11/32 IDX.06 | 1 | 106-000830 | |
| 5 | STD PT SPRING WSHR, BELLEVILLE | 1 | 123-000978 | |
| 6 | WSHR FLAT SCDP 7/8 ODX 3/8 DX.06 THIC | 1 | 106-000831 | |
| 7 | HDW NUT HEX SELF-LOCKING SCDP 5/16 X 18 | 1 | 106-000832 | |
| 8 | STD PT SPRT PAD RUBBER, W/ADV BLK | 4 | 123-001023 | |

The drawings and specifications contained herein are the property of DGC and shall neither be reproduced in whole or in part without DGC prior written approval nor be implied to grant any license to make, use or sell equipment manufactured in accordance herewith.

## KEYBOARD/COVER ASSEMBLY

### BASIC KEYBOARD/COVER ASSEMBLY

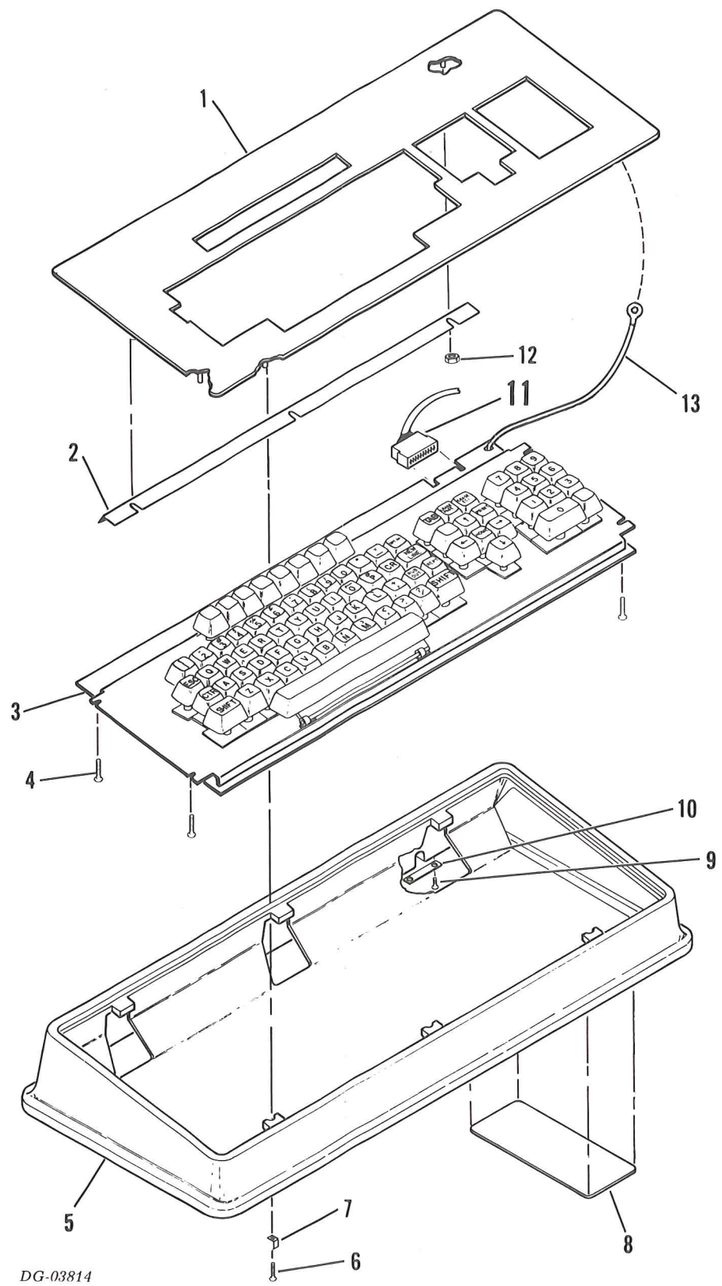


### ENHANCED KEYBOARD/COVER ASSEMBLY

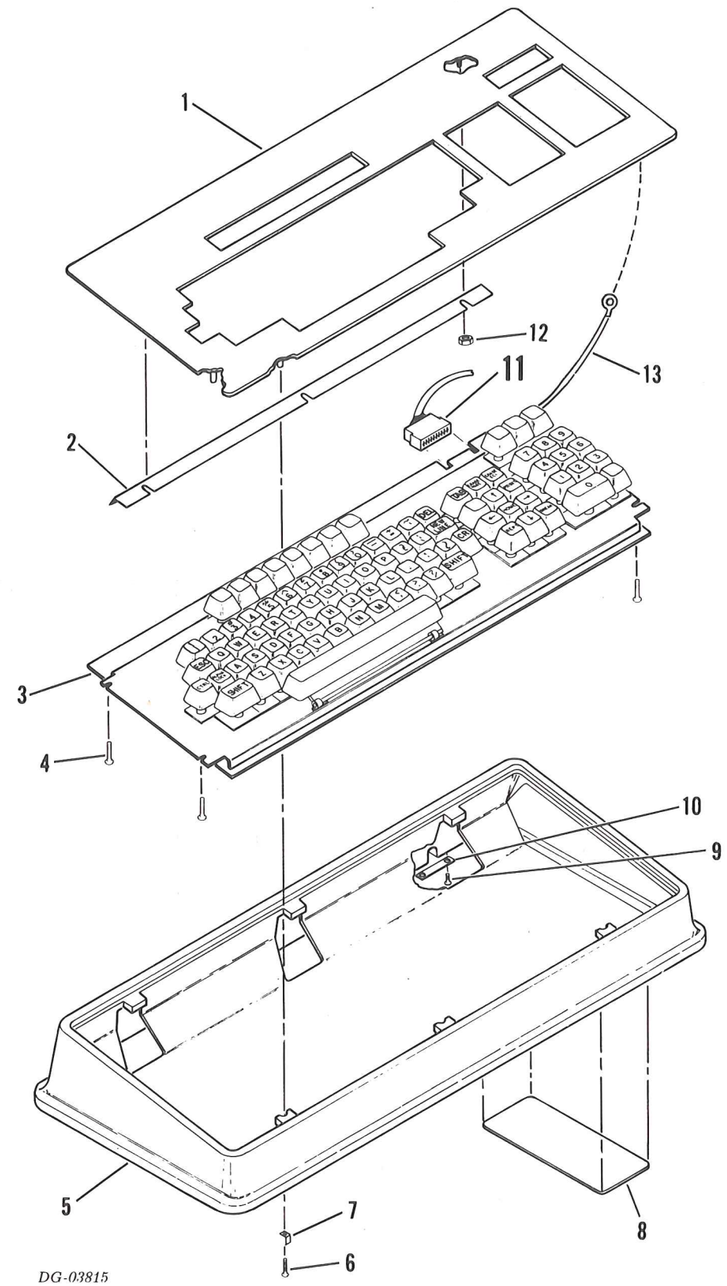


The drawings and specifications contained herein are the property of DGC and shall neither be reproduced in whole or in part without DGC prior written approval nor be implied to grant any license to make, use or sell equipment manufactured in accordance herewith.

| PAGE & ITEM NO. | DESCRIPTION | QTY | DGC PART NO. | REF PAGE NO. |
|---|---|---|---|---|
| | **KEYBOARD/COVER BSC ASSY** | | **005-006746** | **I-2** |
| 1 | MECH PT PLATE KEYBD CVR-000060 KEYBD | 1 | 002-005445 | |
| 2 | MECH PT KEYBD RTNG CLIP , L/C CRT TERM | 1 | 002-005447 | |
| 3 | PUR ASSY KEYBOARD, DSPL TERM | 1 | 118-000452 | |
| 4 | HDW SCR PHH PNH SCDP 6-32 X 3/16 | 4 | 106-000479 | |
| 5 | MECH PT KEYBD ENCL CASE, INTEL TERM | 1 | 002-005116 | |
| 6 | HDW SCR PHH PNH SCDP 4-40 X 3/16 | 3 | 106-000003 | |
| 7 | MECH PT SLIDE CLIP L/C CRT TERM | 3 | 002-005450 | |
| 8 | STD PT SPRT PAD, NEO PRN ADHV BACK | 2 | 123-001025 | |
| 9 | HDW SCR PHH PNH PLASTITE SCDP NO 4 X 1/2 | 2 | 106-000852 | |
| 10 | MECH PT CABLE CLAMP KEYBD LCD | 1 | 002-005601 | |
| **11** | **ASSY CA EXT KEYBD TO CRT L/C DSPL** | **1** | **005-006750** | **III-18** |
| 12 | HDW NUT HEX KEP SCDP 4-40 | 3 | 106-000257 | |
| 13 | GROUND WIRE | 1 | 029-002646 | |
| | WIRE | 5" | 109-000011 | |
| | TERM | 1 | 111-000264 | |
| | **KEYBOARD/COVER T.E. ASSY** | | **005-006743** | **I-2** |
| 1 | MECH PT PLATE KEYBD CVR-000061 KEYBD | 1 | 002-005443 | |
| 2 | MECH PT KEYBD RTNG CLIP , L/C CRT TERM | 1 | 002-005447 | |
| 3 | PUR ASSY KEYBOARD, DSPL TERM | 1 | 118-000338 | |
| 4 | HDW SCR PHH PNH SCDP 6-32 X 3/16 | 4 | 106-000479 | |
| 5 | MECH PT KEYBD ENCL CASE, INTEL TERM | 1 | 002-005116 | |
| 6 | HDW SCR PHH PNH SCDP 4-40 X 3/16 | 3 | 106-000003 | |
| 7 | MECH PT SLIDE CLIP L/C CRT TERM | 3 | 002-005450 | |
| 8 | STD PT SPRT PAD, NED PRN ADHV BACK | 2 | 123-001025 | |
| 9 | HDW SCR PHH PNH PLASTITE SCDP NO 4 X 1/2 | 2 | 106-000852 | |
| 10 | MECH PT CABLE CLAMP KEYBD LCD | 1 | 002-005601 | |
| **11** | **ASSY CA EXT KEYBD TO CRT L/C DSPL** | **1** | **005-006750** | **III-18** |
| 12 | HDW NUT HEX KEP SCDP 4-40 | 3 | 106-000257 | |
| 13 | GROUND WIRE | 1 | 029-002646 | |
| | WIRE | 5" | 109-000011 | |
| | TERM | 1 | 111-000264 | |

The drawings and specifications contained herein are the property of DGC and shall neither be reproduced in whole or in part without DGC prior written approval nor be implied to grant any license to make, use or sell equipment manufactured in accordance herewith.

## EXTERNAL CABLE KEYBOARD TO MAIN

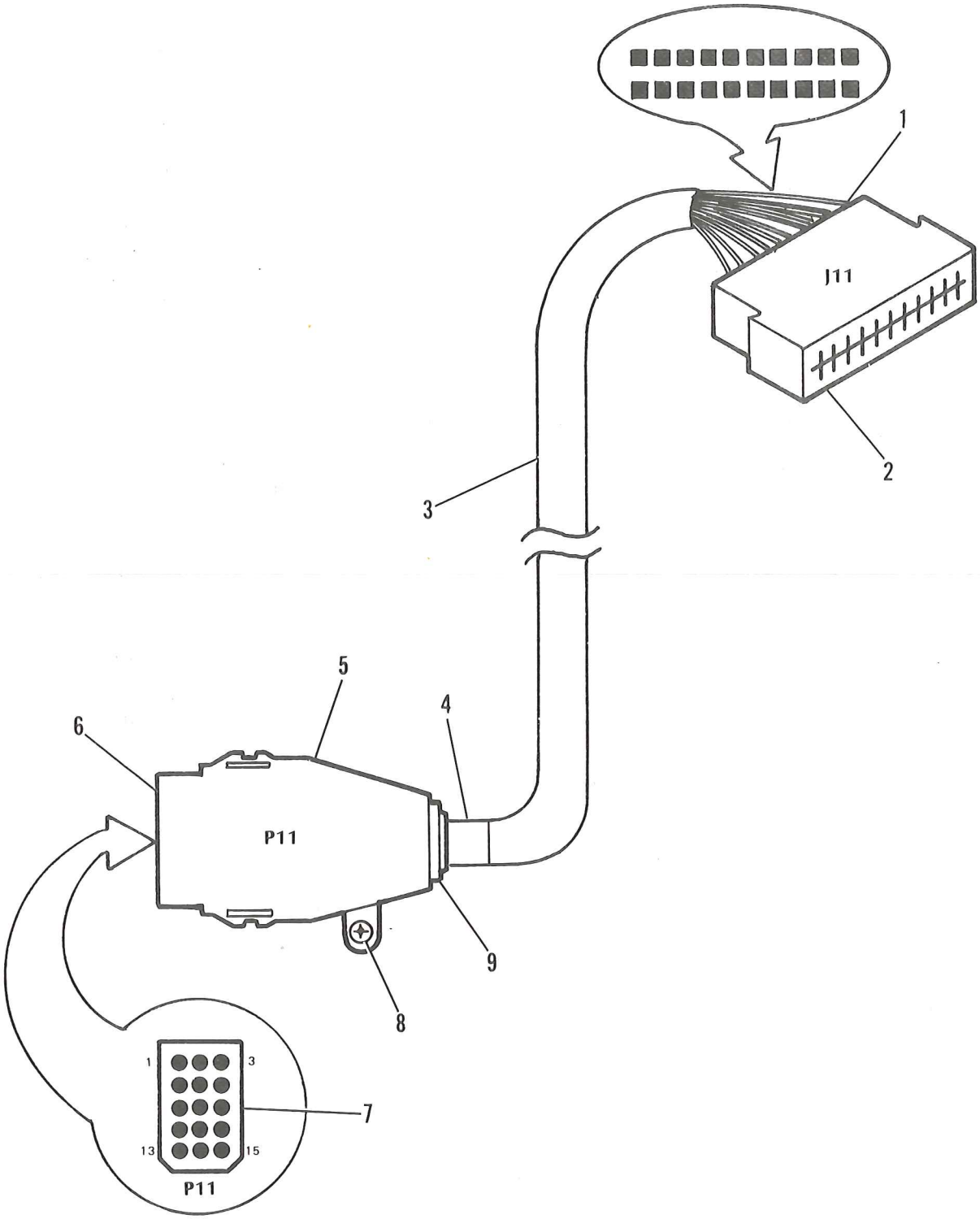


DG-03816

The drawings and specifications contained herein are the property of DGC and shall neither be reproduced in whole or in part without DGC prior written approval nor be implied to grant any license to make, use or sell equipment manufactured in accordance herewith.

| PAGE & ITEM NO. | DESCRIPTION | QTY | DGC PART NO. | REF PAGE NO. |
|---|---|---|---|---|
| III-18 | EXT CABLE KEYBD TO MAIN | 1 | 005-006750 | III-16,22 |
| 1 | CONN CONTACT TWIN LEAF AMP 583616 | 15 | 111-000115 | |
| 2 | CONN PC EDGE 10 DUAL POS AMP 583717-1 | 1 | 111-000119 | |
| | CONN KEY AMP 583274 | 1 | 111-000116 | |
| | CONN SPR RTNG AMP 583691-3 | 5 | 111-000123 | |
| 3 | CABLE 24 AWG 19 COND 7 X 32 | 1 | 109-000045 | |
| 4 | TUBING 1/2 DIA HEAT SHRINK BLK | 1 | 109-000061 | |
| 5 | CONN HOOD STRN RLF 1-350523-9 AMP | 1 | 111-000788 | |
| 6 | CONN MR SKT CON 26-18 GLD AMP 350037-2 | 15 | 111-000237 | |
| 7 | CONN MR HSG AMP NO 1-35024409 15SKT | 1 | 111-000260 | |
| 8 | HDW SCREW PHH PNH TF BLK 6-32 X 3/8 | 1 | 106-000909 | |
| 9 | CONN STRN RLF GROMMET 1-350 380-1AMP | 1 | 111-000790 | |

The drawings and specifications contained herein are the property of DGC and shall neither be reproduced in whole or in part without DGC prior written approval nor be implied to grant any license to make,use or sell equipment manufactured in accordance herewith.

## PRINTER OPTION 6054

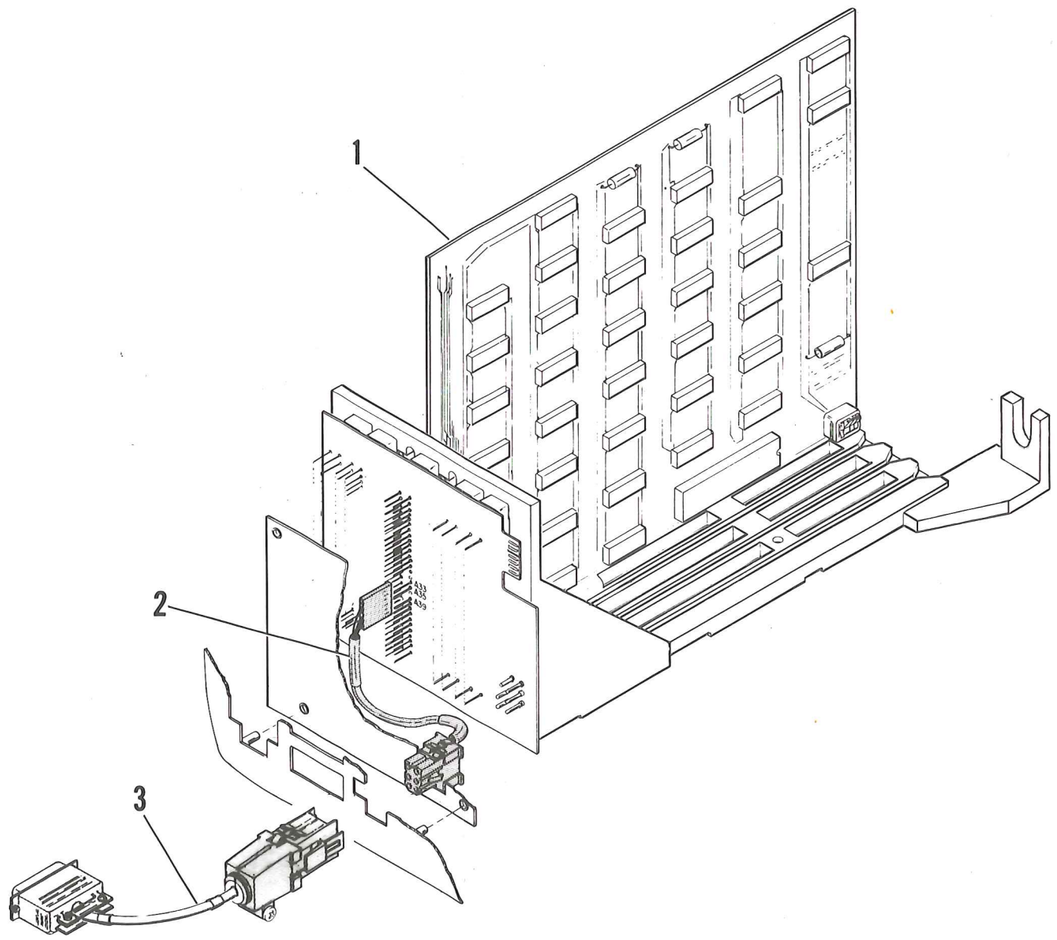


## PRINTER OPTION 6055

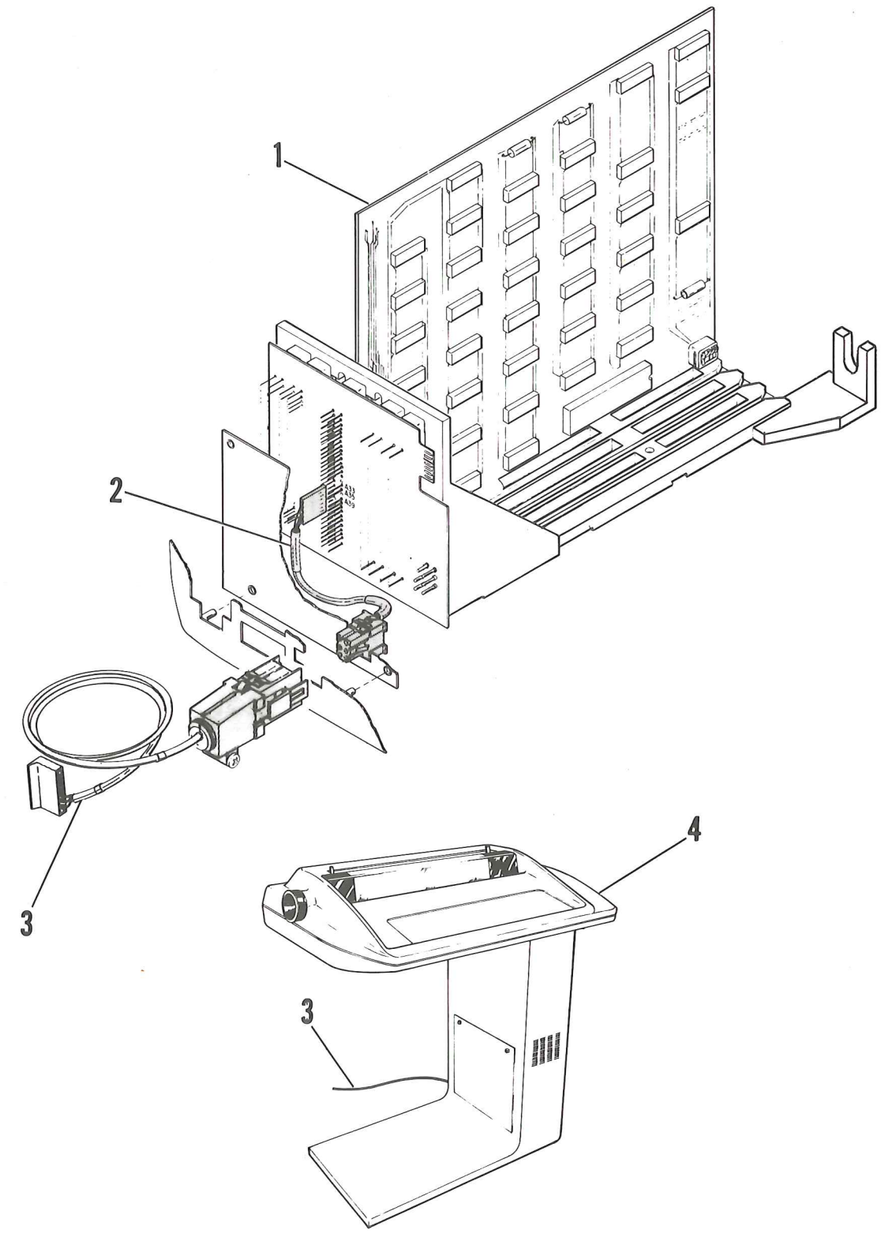


The drawings and specifications contained herein are the property of DGC and shall neither be reproduced in whole or in part without DGC prior written approval nor be implied to grant any license to make, use or sell equipment manufactured in accordance herewith.

| PAGE & ITEM NO. | DESCRIPTION | QTY | DGC PART NO. | REF PAGE NO. |
|---|---|---|---|---|
| III-20 | **PRINTER OPTION MODEL 6054** | | | I-5-8 |
| 1 | **PCB PRINTER OPTION** | | **005-008434** | |
| | IPL PRT INTFC | REF | 016-000440 | |
| 2 | **INTERNAL CABLE ASSEMBLY** | | **005-008432** | |
| | WIRE TERMINATION | 1 | 029-002647 | |
| | WIRE TERMINATION | 1 | 029-002648 | |
| | WIRE TERMINATION | 1 | 029-002649 | |
| | SLEEVING 3/16" HEAT SHRINK | 1 | 109-000099 | |
| | CONN KEY AMP 86286-1 | 3 | 111-000148 | |
| | CONN SKT MSG 6 CKT MR AMP #1-480613-9 | 1 | 111-000580 | |
| | CONN 6P MOD IV 86427-9 | 1 | 111-000693 | |
| 3 | **EXTERNAL MODEM CABLE ASSEMBLY** | | **005-009062** | |
| | HDW SCR PHH PNH TF BLK OXD 6-32 X 3/8 | 1 | 106-000909 | |
| | CABLE 22 AWG 6-COND 7 X 32 | 8" | 109-000086 | |
| | TUBING 3/8 DIAHEAT SHRINK RED | 4" | 109-000071 | |
| | CONN JUNCTION SHELL D824659 | 1 | 111-000020 | |
| | CONN SCREW LOCK ASSY FEMALE D204018-2 | 2 | 111-000022 | |
| | CONN FEMALE/D110238-35 | 3 | 111-000145 | |
| | CONN 25 CONT SKT D8C255 W/O PINS | 1 | 111-000334 | |
| | CONN HSG 6 CKT PIN AMP #1-4806 12-9 | 1 | 111-000581 | |
| | TERM PIN 26-18 AWG CRIMP MR 350018-3 | 3 | 111-000627 | |
| | CONN HOOD CA STRN RLF 1-350373-9 AMP | 1 | 111-000789 | |
| | CONN STRN RLF GROMMET 1-350377-D AMP | 1 | 111-000791 | |
| III-20 | **PRINTER OPTION MODEL 6055** | | | I-5-8 |
| 1 | **PCB PRINTER OPTION** | | **005-008434** | |
| | IPL PTR INTFC | REF | 016-000440 | |
| 2 | **INTERNAL CABLE ASSEMBLY** | | **005-008432** | |
| | WIRE TERMINATION | 1 | 029-002647 | |
| | WIRE TERMINATION | 1 | 029-002648 | |
| | WIRE TERMINATION | 1 | 029-002649 | |
| | SLEEVING 3/16" HEAT SHRINK | 1 | 109-000099 | |
| | CONN KEY AMP 86386-1 | 3 | 111-000148 | |
| | CONN SKT MSG 6 CKT MR AMP #1-480613-9 | 1 | 111-000580 | |
| | CONN 6P MOD IV 86427-9 | 1 | 111-000693 | |
| 3 | **EXTERNAL CABLE ASSEMBLY** | | **005-008433** | |
| | HDW SCR PHH PNH TF BLK OXD 6-32 X 3/8 | 1 | 106-000909 | |
| | CABLE 22 AWG 6-COND 7 X 32 | 1 | 109-000086 | |
| | SLEEVING 3/16";HEAT SHRINK | 1 | 109-000099 | |
| | CONN PCB MOLEX 09-50-3061 | 1 | 111-000565 | |
| | TERM 2478 18-24 AWG MOLEX 08-50-0105 | 3 | 111-000578 | |
| | CONN HSG 6 CKT PIN AMP #1-480612-9 | 1 | 111-000581 | |
| | TERM PIN 26-18 AWG CRIMP MR 350018-3 | 3 | 111-000627 | |
| | CONN HOOD CA STRN RLF 1-350373-9 AMP | 1 | 111-000789 | |
| | CONN STRN RF GROMMET 1-350377-0 AMP | 1 | 111-000791 | |
| 4 | **DASHER MODEL 6041** | | **005-007880** | |

The drawings and specifications contained herein are the property of DGC and shall neither be reproduced in whole or in part without DGC prior written approval nor be implied to grant any license to make, use or sell equipment manufactured in accordance herewith.

# INTERCONNECTION DIAGRAM

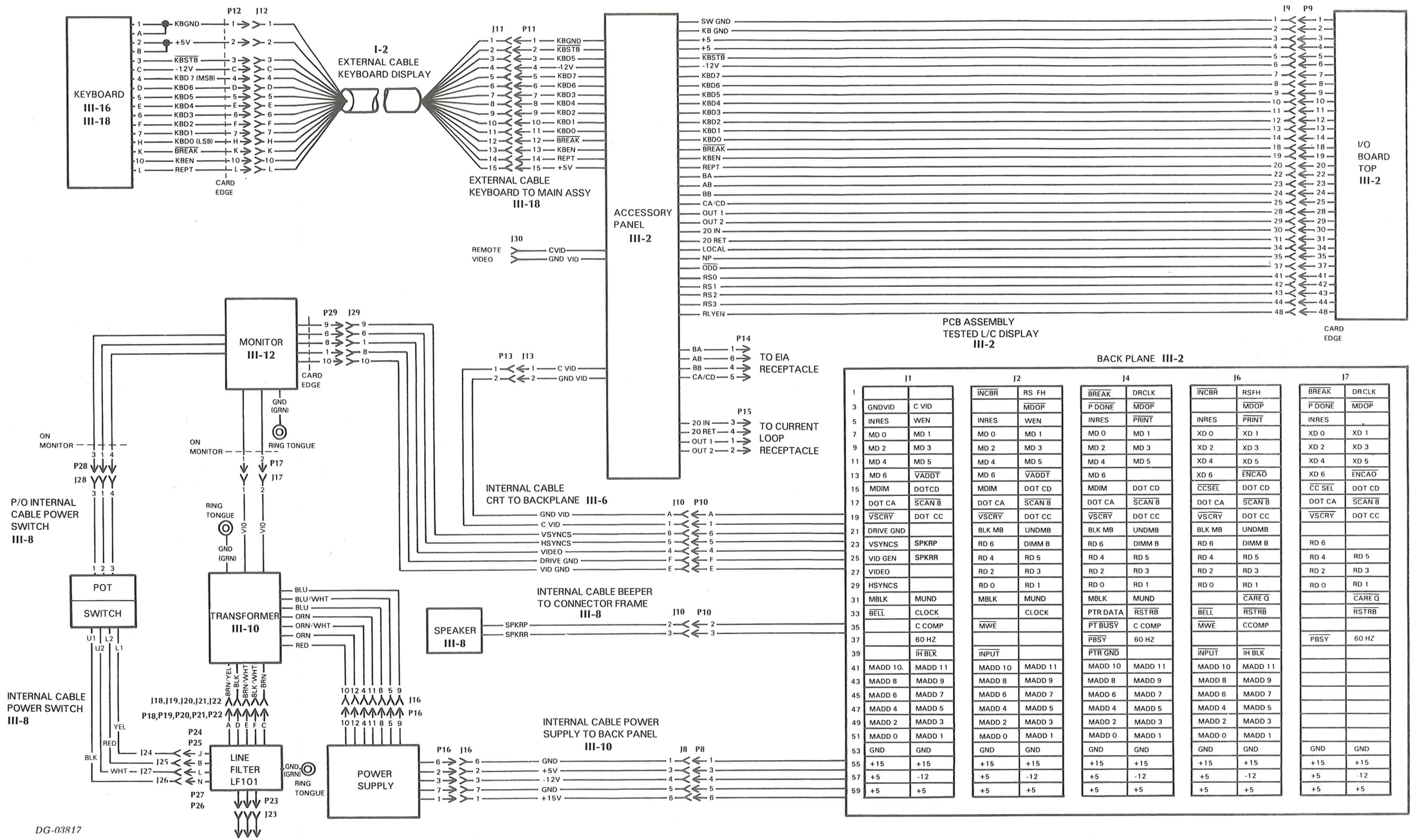


The drawings and specifications contained herein are the property of DGC and shall neither be reproduced in whole or in part without DGC prior written approval nor be implied to grant any license to make, use or sell equipment manufactured in accordance herewith.